REVISIONS					
LTR	DESCRIPTION	DATE	REV.	CHKD.	APVD.
1 x1	取消SEMKO字樣	2005.04.28	高翠平		夏正雄
2 x1	更新產品VDE編號,參C03090087	2009.05.13	郭益平	陸昌妹	郭遠峰
3 x1	To correct name of manufacturer.(C03110372)	2011.01.05	黃健瑋	郭素玲	郭遠峰
4 x1	Update the approved standard(ECR C03140514)	2014.04.24	黃健瑋	郭素玲	郭遠峰

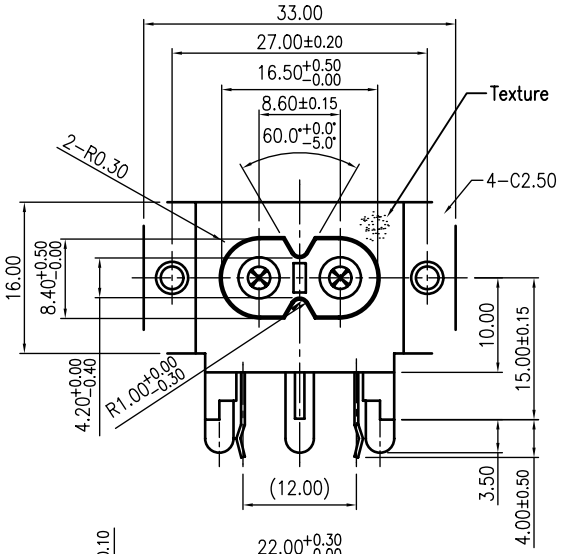

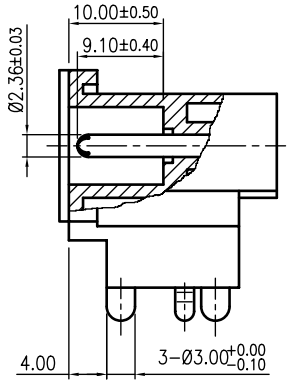

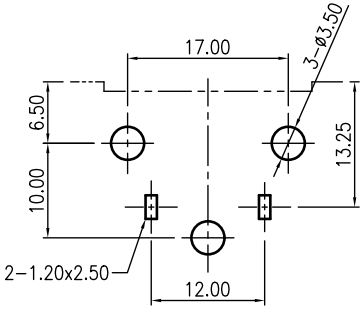

PCB Layout Dimension (Tolerance: ±0.10)
(Recommend min. Dimension)(Bottom View)

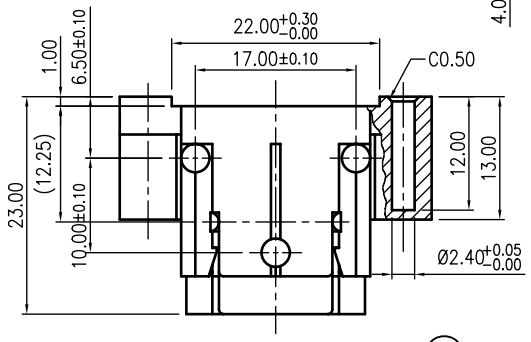

4 2 Approved Standard : VDE Certificate No.40013743

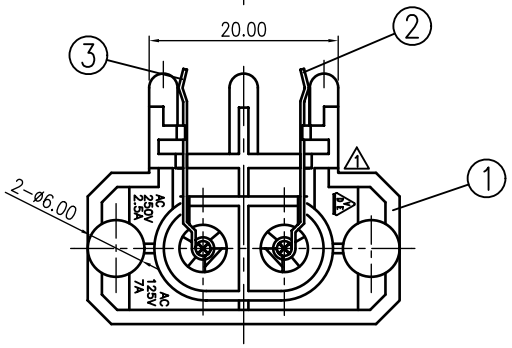

LTR	PART NAME	Q'TY	MATERIAL	REMARK
3	PIN 2	1	C2680R−1/2H t=0.40	MBCu−Sn
2	PIN 1	1	C2680R−1/2H t=0.40	MBCu−Sn
3 1	HOUSING	1	PPO(SABUC N300)UL 94V−0	Black

DIMENSION	TOLERANCE						
120~315	±0.50	DWN	高翠平	DATE	2005.04.28	SCALE 1.25/1	NAME AC POWER SOCKET
30~120	±0.35	DSND	劉怡廷	DATE	1997.12.12	PROJECTION	
6~30	±0.22	CHKD	劉望全	DATE	2005.04.28		CAT. NO. SWHJC−033−P
BELOW 6	±0.16	APVD	夏正雄	DATE	2005.04.29	UNIT: mm	

SWEETA PRODUCTS CORPORATION

DWN.NO. A−033−P 1/1 E

UNLESS OTHERWISE SPECIFIED, TOLERANCE ON DECIMAL: ±0.30 ANGLES: ±5°

SONY specifies the raw material is SS−00259 the latest version of document requests, and purchased from the SONY specified raw materials suppliers.