Rating	10A 12V DC △1	Mounting Hole	Circuit Diagram
Contact Resistance	50m ohm Max	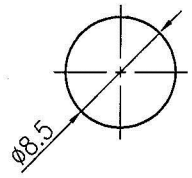 Thickness:15.7mm max.	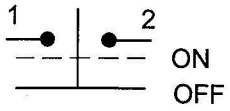 2P SPST ON-OFF
Insulation Resistance	DC 500V 100M ohm Min		
Dielectric Strength	AC 1500V 1 minute		
Switch Function	PUSH-OFF/PULL-ON		

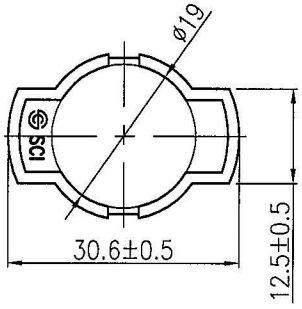

Material:
Frame: Black, PF
Actuator: Black, ABS

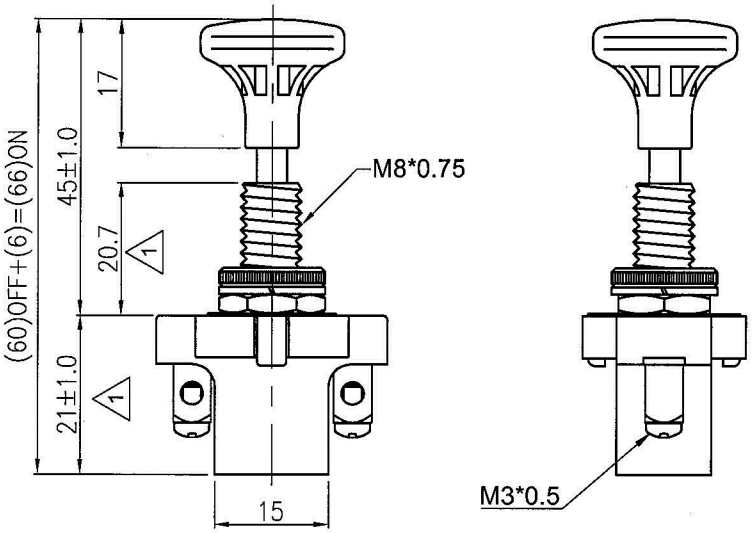

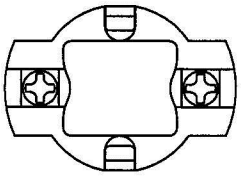

Tolerances Unless Otherwise Specified ±0.3

			△
12/17/'15	曹盈芳	圖面修改：1. Rating 6A12VDC/3A24VDC依目錄修改為10A12VDC	△1
12/17/'15	曹盈芳	2. 14.5依目錄修改為20.7, 20依目錄修改為21	△1
Date	Name	Description	No.

Drawn	Checked	Approved	SCI BOM No.	1120118	Model Name	PUSH PULL SWITCH	
曹盈芳		王[illegible]	Customer No.		Model No.	SPA3-5CA-06	Rev.
12/17/'15		12/17/15	Unit	mm	SWEETA PRODUCTS CORPORATION		1