喜威達企業股份有限公司 SWEETA PRODUCTS CORPORATION

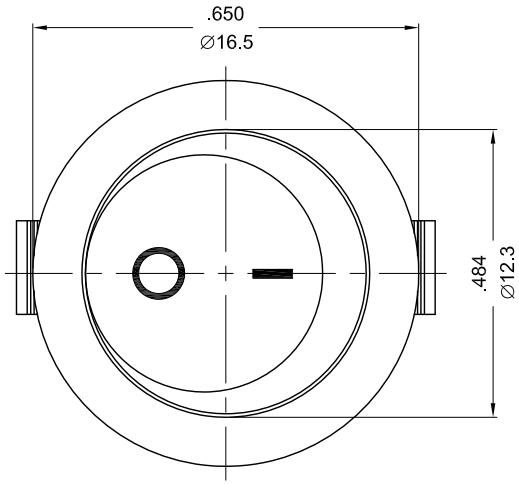

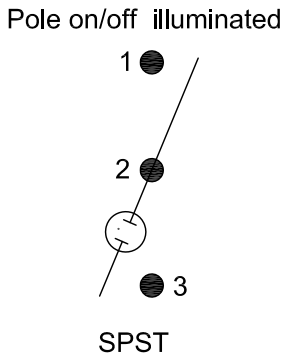

ROCKER SWITCH MODEL MR5 SERIES

RATING:3A 250VAC (UL/CUL)
6A 125VAC (UL/CUL)
3A 250V~ μT100/55(VDE/ENEC/CQC)
DIELECTRIC VOLTAGE-WITHSTAND:1,000VAC FOR 1 MINUTE
INSULATION RESISTANCE:DC 500V 100MΩ (MIN.)
CONTACT RESISTANCE:20mΩ INITIAL (MAX.)
△2 ILLUMINATION:100~125VAC

PANEL CUTOUT DIMENSION

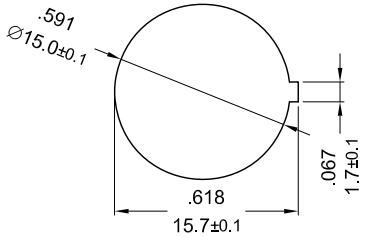

X=(1.0~2.0mm)
PANEL THICKNESS

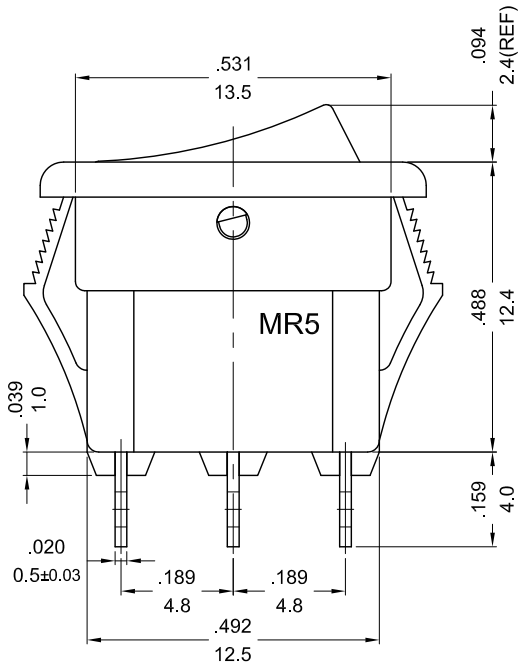

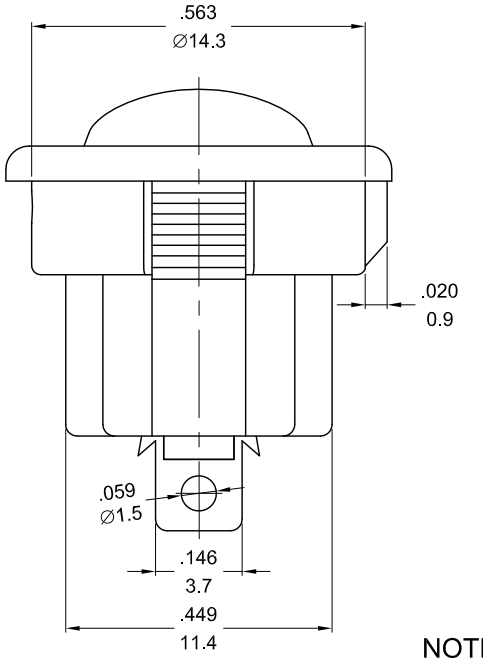

NOTE: TOLERANCES UNLESS OTHERWISE SPECIFIED:±.012/0.3(in/min)

REVISION	DESCRIPTION	REVISED BY	TOLERANCES				ANGLE ½°	UNIT	mm	PART NAME	SMR5 SPEC DRAWING	DWG NO
△4			DRAWN BY	向 宏	DESIGNED BY	聶 明	SCALE	3/1				S4736B
△3												
△2 2012.08.15	增加電壓說明，重新出圖	向 宏	CHECKED BY		APPROVED BY		DATE	2012.05.11		PART NO	SMR5-110-R5L-BRWC	
△1 2012.05.11	首次出圖	向 宏										