Rating	16A 125VAC, 10A 250VAC
	10A 125VAC, 6A 250VAC CQC
	10(4)A 250V~
Contact Resistance	50m ohm Max.
Insulation Resistance	DC 500V 100M ohm Min.
Dielectric Strength	AC 1500V 1 minute
Operation Temperature	-25°C~85°C
Switch Function	2P SPST ON-OFF

Mounting Hole

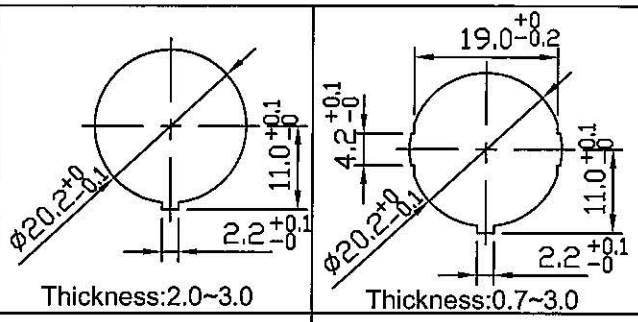

Circuit Diagram

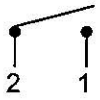

Material:
Frame: Nylon#66, White
Actuator: Nylon#66, White
Printed: None

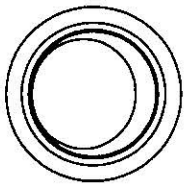

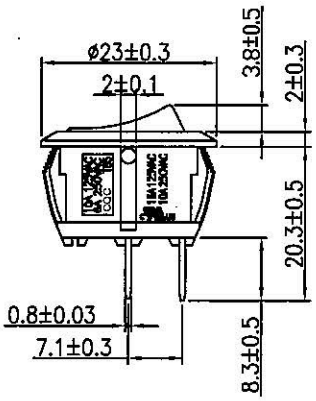

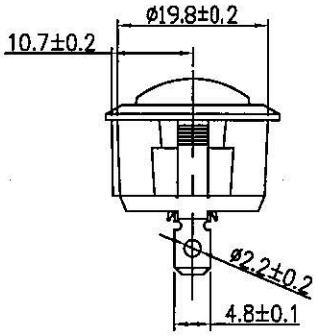

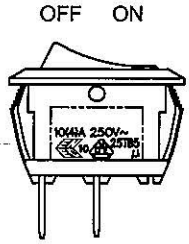

							△
							△
Date	Name	Description					NO
Drawn	Checked	Approved	SCI BOM NO.	1823343	Model Name	ROCKER SWITCH	
曹盈芳		邦	Customer No.		Model No.	SR13-208A-02	Rev.
02/02/'15		2/2/15	Unit	mm	SWEETA PRODUCTS CORPORATION		0