喜威達企業股份有限公司 SWEETA PRODUCTS CORPORATION

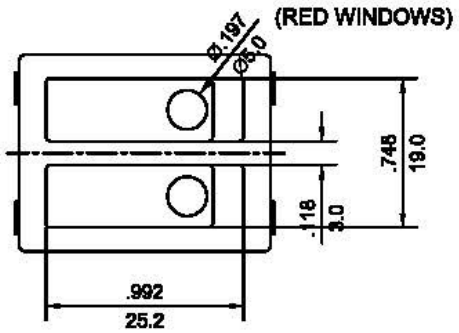

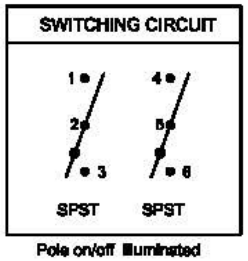

ROCKER SWITCH MODEL: R SERIES

RATING:(1) 16A 125VAC (UL/CSA)
(2) 16A 250VAC (UL/CSA)
(3) 20A 125VAC (UL)
(4) 16(4)A 250V~T125 (VDE/ENEC/CQC)
(5) 10(2)A 250V~T125

DIELECTRIC WITHSTAND VOLTAGE: 1000VAC 1 MIN
INSULATION RESISTANCE: 100MΩ (MIN)
CONTACT RESISTANCE: 20mΩ (MAX.)
ILLUMINATED: 100~125VAC

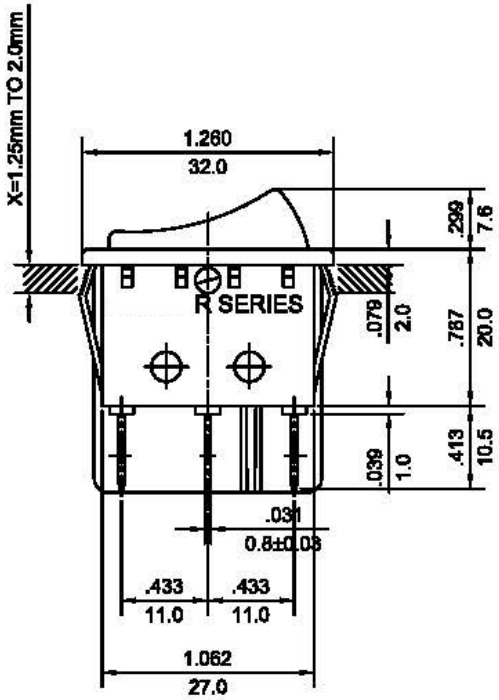

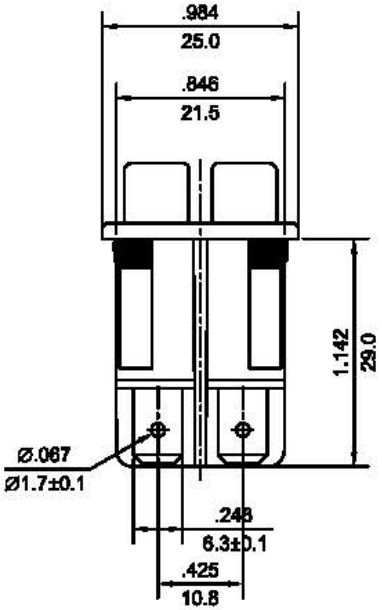

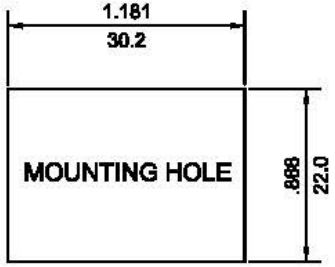

X=(0.75~1.25mm)
PANEL THICKNESS

NOTE: TOLERANCES UNLESS OTHERWISE SPECIFIED:$\pm\frac{0.012}{0.3}$ (in/mm)

REVISION	DESCRIPTION	REVISED BY	TOLERANCES X.X:			ANGLE ½°		UNIT	mm	PART NAME	SR SPEC DRAWING	DWG NO
4			DRAWN BY	吳美玉	DESIGNED BY	ERIC	SCALE	1/1				S0009B
3												
2 2009.08.26	整理圖檔,重新出圖	張勤茵	CHECKED BY		APPROVED BY		DATE	2003.12.08		PART NO	SR210-2CRC-**N	
1 2003.12.19	變更圖框,首次出圖	鄒紅海										